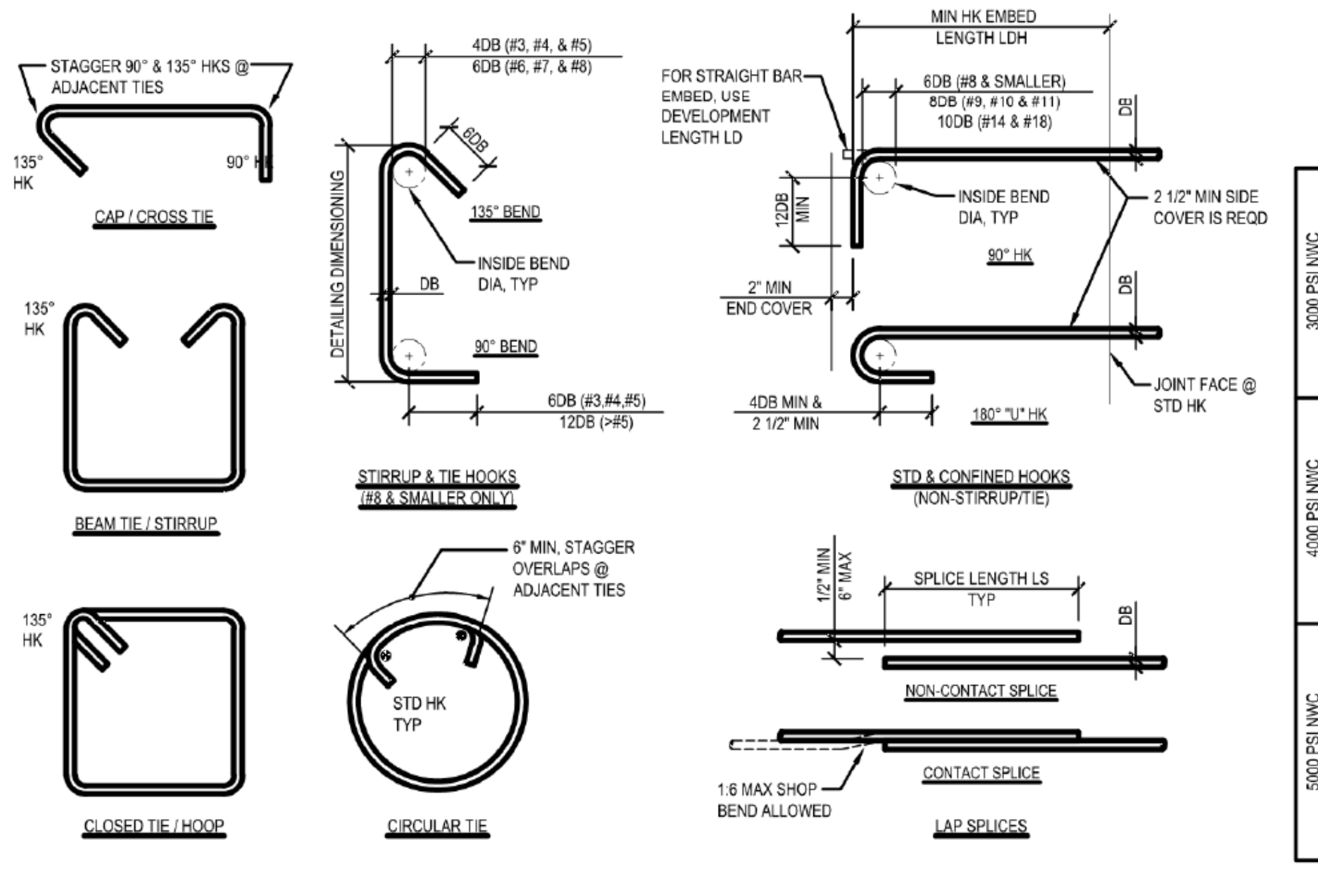

HOOKS, LAPS & DEVELOPMENT LENGTHS						
	BAR SIZE	STD HOOK DEVELOPMENT LENGTH LDH (IN)	CLASS B LAP SPLICE LS (IN)		DEVELOPMENT LENGTH LD (IN)	
			BOTT	TOP	BOTT	TOP
3000 PSI NWC	#3	6	22	28	17	22
	#4	8	29	37	22	29
	#5	10	36	47	28	36
	#6	12	43	56	33	43
	#7	14	63	81	48	63
	#8	16	72	93	55	72
	#9	18	81	105	62	81
	#10	20	91	118	70	91
	#11	22	101	131	78	101
4000 PSI NWC	#3	6	19	24	15	19
	#4	7	25	32	19	25
	#5	9	31	40	24	31
	#6	10	37	48	29	37
	#7	12	54	70	42	54
	#8	14	62	80	48	62
	#9	15	70	91	54	70
	#10	17	79	102	61	79
	#11	19	87	113	67	87
5000 PSI NWC	#3	6	17	22	13	17
	#4	6	22	29	17	22
	#5	8	28	36	22	28
	#6	9	33	43	26	33
	#7	11	49	63	37	49
	#8	12	55	72	43	55
	#9	14	63	81	48	63
	#10	15	70	91	54	70
	#11	17	78	101	60	78

NOTES:

1. SEE BUILDING CODE AND ACI LATEST VERSION FOR ALL REQUIREMENTS NOT NOTED.
2. FOR LIGHTWEIGHT CONCRETE MULTIPLY LDH, LS AND LD VALUES SHOWN BY 1.33.
3. "TOP" BARS ARE HORIZONTAL BARS WITH MORE THAN 12" OF FRESH CONCRETE CAST BELOW BARS. ALL OTHER BARS ARE "BOTT" BARS.
4. WHERE REQUIRED LS CANNOT BE OBTAINED WITH STRAIGHT BARS, EXTEND REINFORCING AS FAR AS POSSIBLE (LDH MINIMUM) AND PROVIDE STANDARD HOOK, WHERE LDH CANNOT BE OBTAINED, CONSULT SEOR.
5. VALUES SHOWN ARE FOR GRADE 60 (FY=60 KSI REINFORCEMENT.
6. SPLICE LENGTHS SHOWN ARE FOR CLEAR SPACING NOT LESS THAN 2DB, CONCRETE COVER NOT LESS THAN DB.
7. FOR EPOXY-COATED AND/OR BUNDLED REINFORCEMENT CONSULT SEOR.
8. WHERE BARS OF DIFFERENT SIZES ARE LAP SPLICED IN TENSION, SPLICE LENGTH SHALL BE THE LARGER OF: LD OF THE LARGER BAR AND LS OF THE SMALLER BAR.

REINFORCEMENT DETAILS & DEVELOPMENT LENGTHS

NTS

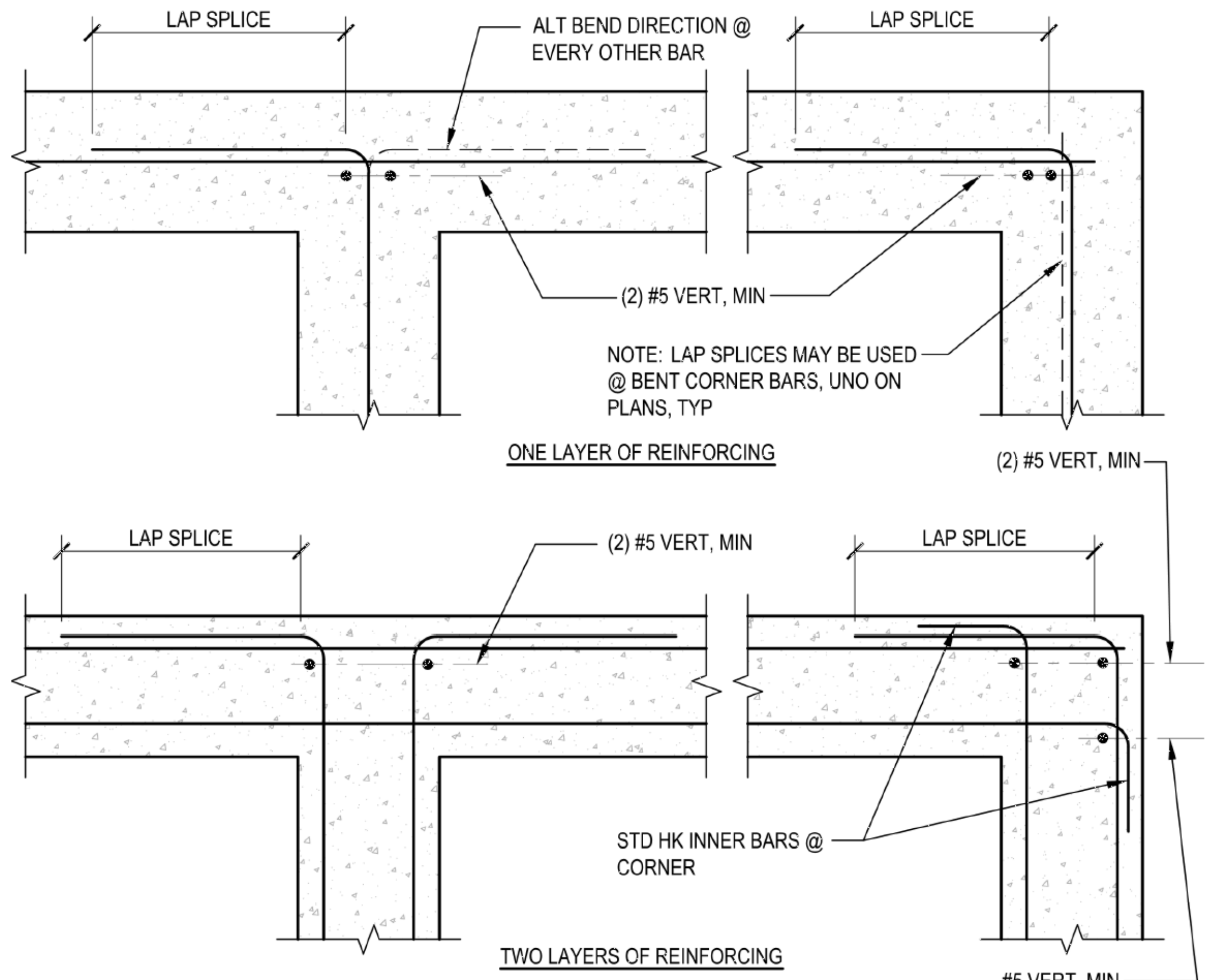

REINFORCING AT WALL & FOOTING INTERSECTIONS

NTS

GENERAL NOTES

1. REFER TO THE TYPICAL DETAIL SHEETS FOR TYPICAL DETAILS OF CONSTRUCTION. TYPICAL DETAILS APPLY TO ALL CONSTRUCTION UNLESS SPECIFICALLY NOTED OR SHOWN OTHERWISE. WHERE CONDITIONS REQUIRE MODIFICATIONS OF A TYPICAL DETAIL, THE CONTRACTOR SHALL SUBMIT MODIFIED DETAIL FOR APPROVAL BY THE ENGINEER OF RECORD PRIOR TO FABRICATION AND INSTALLATION. DETAILS OF CONSTRUCTION NOT SHOWN SHALL BE OF SAME NATURE AS THOSE SHOWN FOR SIMILAR CONSTRUCTION.
2. WHERE INFORMATION IS CONFLICTING, SPECIFIC DETAILS SHALL GOVERN OVER TYPICAL DETAILS WHICH SHALL GOVERN OVER THESE NOTES.
3. ALL DIMENSIONS ON STRUCTURAL DRAWINGS SHALL BE CHECKED AGAINST ARCHITECTURAL DIMENSIONS. DO NOT SCALE DRAWINGS. IF DIMENSIONS ARE OMITTED OR NOT CLEAR, CONTACT THE ARCHITECT (ARCH) OR ENGINEER OF RECORD (EOR). ALL DIMENSIONS RELATED TO EXISTING CONDITIONS SHALL BE FIELD VERIFIED BY THE CONTRACTOR. DIMENSIONS ARE TO THE FACE OF STUDS, AND TO CENTERLINE OF COLUMNS UNO.
4. IT IS THE CONTRACTOR'S RESPONSIBILITY TO IMMEDIATELY NOTIFY THE EOR OF ANY CONFLICTS BETWEEN THE STRUCTURAL DRAWINGS AND OTHER DRAWINGS; OR EXISTING CONDITIONS NOT SHOWN OR DIFFERENT FROM THOSE SHOWN ON DRAWINGS PRIOR TO COMMENCEMENT OF WORK. THE CONTRACTOR IS NOT TO ORDER MATERIAL OR CONSTRUCT ANY PORTION OF THE BUILDING THAT IS IN CONFLICT UNTIL THE CONFLICT IS RESOLVED WITH THE AFFECTED PARTIES.
5. THE STRUCTURAL DRAWINGS AND SPECIFICATIONS REPRESENT THE FINISHED STRUCTURE. UNLESS OTHERWISE SHOWN THEY DO NOT INDICATE METHOD OF CONSTRUCTION. THE CONTRACTOR SHALL PROVIDE ALL MEASURES NECESSARY TO PROTECT THE CONSTRUCTION AND ALL ADJACENT PROPERTIES DURING CONSTRUCTION. SUCH MEASURES SHALL INCLUDE BUT ARE NOT LIMITED TO BRACING, SHORING OF LOADS DUE TO CONSTRUCTION EQUIPMENT, ETC. OBSERVATION VISITS TO THE SITE BY THE ARCHITECT OR EOR SHALL NOT INCLUDE OBSERVATION OF THE ABOVE ITEMS.
6. SUBSTITUTION REQUESTS FOR MATERIALS SPECIFIED ON THE STRUCTURAL DRAWINGS MAY BE CONSIDERED WITH MATERIALS HAVING EQUIVALENT OR GREATER CAPACITY AND PERFORMANCE. CURRENT EVALUATION REPORTS AND PRODUCT INFORMATION SHALL BE PROVIDED TO THE STRUCTURAL ENGINEER DEMONSTRATING THE REQUIRED CAPACITY AND PERFORMANCE OF THE MATERIAL TO BE SUBSTITUTED. WRITTEN APPROVAL FROM THE EOR SHALL BE OBTAINED PRIOR TO THE SUBSTITUTION OF ANY MATERIAL SPECIFIED ON THE STRUCTURAL DOCUMENTS.
7. IT IS THE CONTRACTOR'S RESPONSIBILITY TO COMPLY WITH THE PERTINENT SECTIONS OF THE "CONSTRUCTION SAFETY ORDERS" ISSUED BY THE STATE OF CALIFORNIA, LATEST EDITION, AND ALL OSHA REQUIREMENTS AS THEY APPLY TO THIS PROJECT. THE ARCHITECT, EOR, AND THE OWNER DO NOT ACCEPT ANY RESPONSIBILITY FOR THE CONTRACTOR'S FAILURE TO COMPLY WITH THESE REQUIREMENTS.
8. ALL WORK IS NEW (N) UNLESS INDICATED AS EXISTING (E).
9. CONSTRUCTION MATERIALS SHALL BE DISTRIBUTED WHEN PLACED ON THE STRUCTURE SUCH THAT LOADS DO NOT EXCEED DESIGN LIVE LOADS OR RESULT IN AN UNBALANCED CONDITION.
10. SHOP DRAWINGS SHALL BE SUBMITTED TO THE EOR (ALLOW FOR A REVIEW DURATION OF 10 BUSINESS DAYS), AND SHALL CONSIST OF EITHER ELECTRONIC FILES OR ONE SET FOR OUR RECORDS AND ONE REPRODUCIBLE SET. REVIEW OF SHOP DRAWINGS AND SUBMITTALS BY THE EOR IS FOR GENERAL COMPLIANCE WITH THE CONTRACT DOCUMENTS. THE CONTRACTOR WILL REMAIN RESPONSIBLE FOR ALL ERRORS OF DETAILING, FABRICATION, AND FOR CORRECT FITTING OF ALL STRUCTURAL MEMBERS, INCLUDING COORDINATION WITH OTHER TRADES. SHOP DRAWINGS AND SUBMITTALS DO NOT CONSTITUTE CHANGE ORDERS. ANY PROPOSED CHANGES TO THE STRUCTURAL DOCUMENTS MUST BE SUBMITTED IN WRITING AS A REQUEST FOR SUBSTITUTION TO THE ARCHITECT AND EOR FOR APPROVAL. SEE "STRUCTURAL SUBMITTALS NOTES" FOR MORE INFORMATION.
11. CORE DRILLS REQUIRED SHALL NOT CUT ANY REINFORCING. THE CONTRACTOR IS TO COORDINATE WORK OF ALL TRADES TO ENSURE COMPLIANCE. ALL CORE DRILLS ARE TO BE PRESENTED TO THE INSPECTOR OF RECORD (IOR) FOR VERIFICATION. THE IOR IS TO DOCUMENT CORES EXAMINED INDICATING AN ABSENCE OF REINFORCING.

REINFORCING STEEL NOTES

1. REINFORCING GRADES FOR CONCRETE OR MASONRY:
   A. ALL BARS EXCEPT THOSE TO BE WELDED............ ASTM A615, GRADE 60
   B. TIES AND STIRRUPS .... ASTM A615, GRADE 60
   C. WELDED WIRE FABRIC .... ASTM A1064
   D. ALL BARS TO BE WELDED .... ASTM A706, GRADE 60

   NOTE: ALL BARS SHALL BE DEFORMED.
2. MAINTAIN MINIMUM CONCRETE COVER FROM FACE OF CONCRETE TO EDGE OF ALL REINFORCEMENT AS FOLLOWS (UNO):

CONDITION	COVER
CAST AGAINST AND PERMANENTLY EXPOSED TO EARTH	3"
FORMED AND EXPOSED TO EARTH OR WEATHER	
- #6 BARS AND LARGER	2"
- #5 BARS AND SMALLER	1 1/2"
UNEXPOSED RAISED SLABS AND WALL FACES (#11 BARS AND SMALLER)	3/4"
UNEXPOSED COLUMNS AND BEAMS	1 1/2"
STRUCTURAL SLABS ON GRADE	
- FROM BOTTOM OF SLAB	2"
- FROM TOP OF SLAB	1 1/2"
OTHER CONCRETE NOT EXPOSED TO WEATHER OR EARTH FOR #11 BARS AND SMALLER	3/4"

   PROVIDE THE LARGEST COVER REQUIRED FOR ALL APPLICABLE CONDITIONS. WHERE #3 STIRRUPS OR TIES ARE USED, ENSURE THAT THE COVER FOR LONGITUDINAL BARS IS ADEQUATE.
3. REINFORCEMENT SHALL BE PLACED IN ACCORDANCE WITH THE CONCRETE REINFORCING STEEL INSTITUTE (CRSI) "MANUAL OF STANDARD PRACTICE". EACH REINFORCING BAR SHALL BE WIRED TO A CROSS BAR AT A MAXIMUM SPACING OF 24"OC. PROVIDE ALL ACCESSORIES NECESSARY TO SUPPORT REINFORCING IN POSITIONS SHOWN ON THE PLANS. DO NOT USE WOOD OR BRICK TO SUPPORT REINFORCING.
4. SPLICES IN CONTINUOUS REINFORCEMENT AS USED IN WALLS, WALL FOOTINGS, ETC., SHALL HAVE A CLASS "B" LAP (1'-6" MIN) AND THE SPLICES IN ADJACENT BARS SHALL BE NOT LESS THAN 5'-0" APART. VERTICAL WALL BARS SHALL BE SPLICED AT OR NEAR FLOOR LINES. BARS MAY BE WIRED TOGETHER AT SPLICES OR LAPS EXCEPT FOR TOP REINFORCING OF BEAMS AND SLABS OR WHERE SPECIFICALLY DETAILED TO BE SEPARATED. WELDED WIRE FABRIC SHALL BE LAPPED 12" MINIMUM.
5. ALL DOWELS, ANCHOR BOLTS AND OTHER HARDWARE TO BE SET IN CONCRETE SHALL BE TIED IN PLACE PRIOR TO PLACEMENT OF CONCRETE. NO WET SETTING, STABBING, RODDING OR OTHER MOVEMENT OF EMBEDDED ITEMS SHALL BE PERFORMED DURING PLACEMENT OF CONCRETE.
6. BEND REINFORCING BARS COLD.
7. STEEL SHALL BE KEPT CLEAN AND FREE OF RUST.
8. DOWELS BETWEEN FOOTING AND WALLS OR COLUMNS SHALL BE THE SAME GRADE, SIZE AND SPACING AS THE MAIN REINFORCING UNO.
9. ALL BARS SHALL BE MARKED SO THEIR IDENTIFICATION CAN BE MADE WHEN THE FINAL IN PLACE INSPECTION IS MADE.
10. CHAIRS OR SPACERS FOR REINFORCING SHALL BE PLASTIC WHEN RESTING ON EXPOSED SURFACES.
11. WHERE LONGITUDINAL REINFORCING BARS ARE PLACED IN 2 OR MORE LAYERS, BARS IN THE UPPER LAYERS SHALL BE PLACED DIRECTLY ABOVE BARS IN THE BOTTOM LAYER.
12. ALL BENDS WITHIN STIRRUPS, HOOPS, AND CROSS-TIES SHALL ENGAGE A LONGITUDINAL BAR. PROVIDE #4 SPACER BAR WHERE A LONGITUDINAL BAR IS NOT SPECIFICALLY DETAILED.

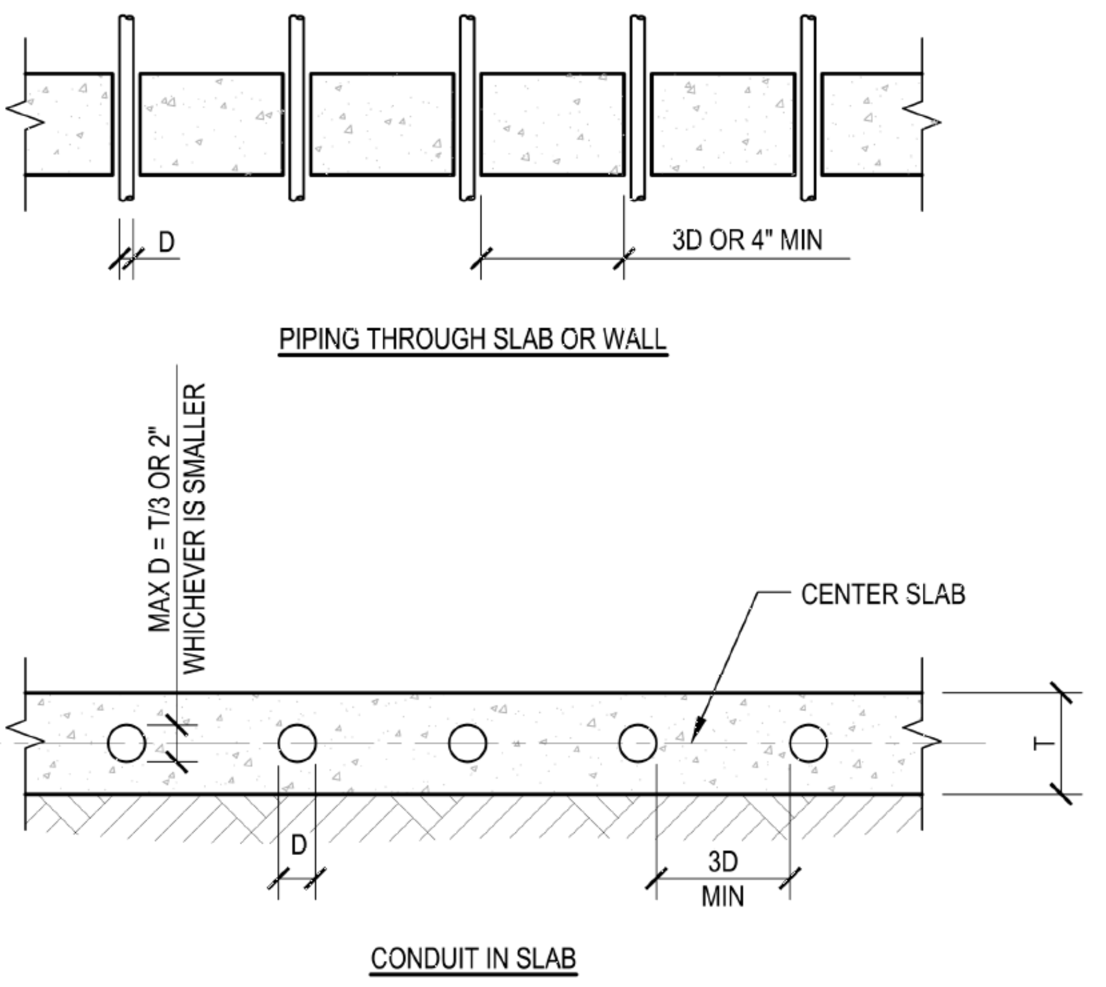

NOTES:

1. NO CONDUIT SHALL BE ALLOWED IN SLABS UNLESS "T" IS A MINIMUM OF 6".
2. WHERE CLEAR DISTANCE BETWEEN SLEEVES CANNOT BE ACHIEVED, THIS AREA SHALL BE TREATED AS A SLAB OPENING PER TYPICAL OPENING IN SLAB ON GRADE DETAIL.
3. SEE MECHANICAL AND ELECTRICAL DRAWINGS FOR LOCATION.

PIPES & CONDUITS IN OR THROUGH SLAB & WALL

NTS

STRUCTURAL CONCRETE NOTES

1. CONCRETE SHALL BE MIXED, PLACED AND CURED IN ACCORDANCE WITH ACI 318 AND ACI 301 LATEST EDITION, AND PROJECT SPECIFICATIONS.
2. CONCRETE SHALL NOT BE DROPPED THROUGH REINFORCING STEEL (AS IN WALLS) SO AS TO CAUSE SEGREGATION OF AGGREGATES. IN SUCH CASES, HOPPERS AND VERTICAL CHUTES OR TRUNKS SHALL BE USED. CHUTES OR TRUNKS SHALL BE OF VARIABLE LENGTHS SO THAT FREE UNCONFINED FALL OF CONCRETE SHALL NOT EXCEED SIX FEET. A SUFFICIENT NUMBER OF CHUTES OR TRUNKS SHALL BE USED TO ENSURE THE CONCRETE IS KEPT LEVEL AT ALL TIMES.
3. CONSTRUCTION JOINTS SHALL BE CLEANED AND ROUGHENED BY REMOVING THE ENTIRE SURFACE TO EXPOSE CLEAN AGGREGATE SOLIDLY EMBEDDED IN THE MORTAR MATRIX. SEE PLANS AND DETAILS FOR LOCATION AND TYPE OF CONSTRUCTION JOINT. LOCATIONS OF ADDITIONAL CONSTRUCTION JOINTS NOT SHOWN ON THESE PLANS SHALL BE SUBMITTED FOR APPROVAL TO THE EOR PRIOR TO PLACING ANY CONCRETE.
4. STRUCTURAL CONCRETE SHALL MEET THE FOLLOWING DESIGN CRITERIA:

LOCATION	MIN 28-DAY COMP STRENGTH	CONC TYPE	MAX AGGREGATE SIZE	MAX W/C RATIO
FOUNDATIONS	4000 PSI	NWC	1 1/2"	0.50
PRECAST PANELS	9000 PSI	NWC	1/4" - 3/8"	0.30
ALL OTHER STRUCTURAL CONCRETE NOT NOTED ABOVE	3000 PSI	NWC	1"	0.50

   a. MAXIMUM AIR DRY UNIT WEIGHT OF LIGHTWEIGHT CONCRETE SHALL NOT EXCEED 110 PCF, UNLESS APPROVED BY EOR.
   b. WHEN THE USE OF PLASTICIZER (ASTM C1017, TYPE I OR II) OR WATER REDUCER (ASTM C494, TYPE F OR G) IS USED, MAXIMUM SLUMP SHALL BE 4" PRIOR TO ADMIXTURE AND 8" INCLUDING ADMIXTURE AT THE POINT OF DELIVERY. IN THE ABSENCE OF PLASTICIZER AND WATER REDUCER, SLUMP AT THE POINT OF DELIVERY SHALL NOT EXCEED 4".
   c. W/C RATIO INDICATES WATER TO CEMENTITIOUS MATERIALS RATIO.
   d. FOR INTERIOR SLABS ON GRADE AND ALL OTHER SLABS RECEIVING ADHERED FLOORING FINISHES (I.E., GLUED, ETC.), THE MAXIMUM W/C RATIO SHALL NOT EXCEED 0.46. CURING COMPOUNDS USED ON CONCRETE THAT IS TO RECEIVE FINISHES SHALL BE COMPATIBLE WITH TILE AND ADHESIVES OR GROUTS IN ACCORDANCE WITH MANUFACTURER'S DATA AND BE APPROVED BEFORE USE.
   e. SLABS ON GRADE, TOPPING SLABS, AND ELEVATED CONCRETE FLOORS SHALL HAVE A MAXIMUM SHRINKAGE RATE OF 0.04% AT 28 DAYS PER ASTM C 157 (CURING TEST SPECIMENS TO BE CONSISTENT WITH FIELD CONDITIONS), OR USING EMBEDDED VIBRATING WIRE STRAIN GAUGES. RESULTS OF TESTING SHALL BE SUBMITTED TO ENGINEER.
   f. SEE ACI 318-11 SECTION 3.3.2 FOR ADDITIONAL REQUIREMENTS REGARDING MAXIMUM AGGREGATE SIZE.
   g. AGGREGATE GRADATION OF 3/8" MAXIMUM (PEA GRAVEL) SHALL NOT BE USED WHERE FINISHED CONCRETE SURFACE IS EXPOSED TO VIEW.
5. CONCRETE MIX DESIGN AND TESTING SHALL MEET THE REQUIREMENTS OF THE BUILDING CODE, AND SPECIFICATIONS. ALL CONCRETE MIXES SHALL BE DESIGNED PER ACI 318 SECTION 5.2 BY A RECOGNIZED TESTING LAB STAMPED AND SIGNED BY A LICENSED CALIFORNIA CIVIL ENGINEER AND SUBMITTED TO THE EOR FOR REVIEW PRIOR TO CONCRETE PLACEMENT. STRUCTURAL CONCRETE MIXES SHALL CONSIST OF 5 SACK MINIMUM UNO.
6. AGGREGATES IN NORMAL WEIGHT CONCRETE SHALL CONFORM TO ASTM C-33 (HARDROCK). AGGREGATES IN LIGHT WEIGHT CONCRETE SHALL CONFORM TO ASTM C-330.
7. COMPRESSIVE STRENGTH TEST REPORTS SHALL BE SUBMITTED TO THE BUILDING DEPARTMENT AND THE EOR.
8. PORTLAND CEMENT SHALL BE TYPE II AND SHALL CONFORM TO ASTM C150, LOW ALKALI. MILL TESTS WITH CERTIFICATES OF COMPLIANCE SHALL BE SUBMITTED.
9. CONCRETE MIXING OPERATIONS, ETC. SHALL CONFORM TO ASTM C94.
10. LEAN CONCRETE, WHERE SPECIFICALLY INDICATED, SHALL CONTAIN 2 SACKS OF CEMENT PER CUBIC YARD OF CONCRETE.
11. DRYPACK OR NONSHRINK GROUT SHALL HAVE A MINIMUM 28 DAY COMPRESSIVE STRENGTH OF 5000 PSI, AND CONSIST OF MASTERFLOW 713, EUCON NS GROUT, SIKA GROUT 212, OR APPROVED EQUAL. FOR THICK GROUT LAYERS FOLLOW MANUFACTURER'S GUIDELINES TO ATTAIN THE REQUIRED STRENGTH, WHICH MAY INCLUDE THE ADDITION OF PEA GRAVEL. FOR BASE PLATES LARGER THAN 6 SQUARE FEET, USE HI-FLOW GROUT OR MASTERFLOW 928.
12. DO NOT USE ANY CONCRETE OR GROUT CONTAINING CHLORIDES. WATER USED IN MIX SHALL BE CLEAN AND POTABLE.
13. PRIOR TO ERECTING ANY ELEMENTS THAT LOAD THE FOUNDATION, CONCRETE MUST REACH AN UNCONFINED COMPRESSION STRENGTH OF 2000 PSI MINIMUM AS DETERMINED BY TESTING OR PREVIOUSLY DOCUMENTED DATA FOR THE MIX DESIGN USED UNDER SIMILAR CONDITIONS, AND MUST BE ALLOWED TO CURE FOR A MINIMUM OF 3 DAYS.
14. MAINTAIN CONCRETE ABOVE 50 DEGREES FAHRENHEIT AND IN A MOIST CONDITION FOR A MINIMUM OF 7 DAYS AFTER PLACEMENT UNLESS OTHERWISE ACCEPTED BY EOR.
15. SEE ARCHITECTURAL DRAWINGS FOR WALL OPENINGS, WALL OFFSETS, CHAMFERS, KERFS, DRIPS AND FOR EXTENT OF DEPRESSIONS, RAMPS, ETC.
16. PROVIDE SLEEVES FOR ALL PIPES THROUGH CONCRETE WALLS AND FOOTINGS WHERE SHOWN ON THESE DRAWINGS. CORING IS NOT PERMITTED WITHOUT PRIOR APPROVAL BY THE EOR.
17. EXPOSED CORNERS OF SLABS, BEAMS, WALLS, COLUMNS, ETC. SHALL BE FORMED WITH 3/4" CHAMFER OR 1/2" RADIUS TOOLED EDGE, UNO.

STRUCTURAL DESIGN CRITERIA

1. CODES
   ALL NEW WORK SHALL BE IN CONFORMANCE WITH THE CALIFORNIA BUILDING CODE (CBC) 2013 EDITION, INCLUDING ALL AMENDMENTS. ALL STANDARDS USED SHALL BE THE LATEST VERSION APPROVED BY THE CODE ENFORCEMENT AGENCY ON THE DATE OF THE PERMT ISSUANCE UNLESS SPECIFICALLY NOTED OTHERWISE.
2. GRAVITY DESIGN LOADS
3. LIVE LOADS (REDUIBLE, UNO)
   a. ROOF, UNIFORM (UNOCUPPIED ATTIC SPACE) 10 PSF
4. WIND DESIGN INFORMATION
   5 PSF FOR INTERIOR LATERAL
5. SEISMIC DESIGN INFORMATION
   I = 1.0 RISK CATEGORY II DESIGN. CAT. D SITE CLASS D
   Ss = 2.135 S1 = .726 SDs = 1.423 SD1 = .726
   INTERMEDIATE PRECAST CONCRETE SHEAR WALLS

   EQUIVALENT LATERAL FORCE PROCEDURE
   R = 4.0 CS = 0.250

WELDING NOTES

1. WELDING PROCEDURES, ELECTRODES AND WELDER QUALIFICATIONS SHALL CONFORM TO THE "CODE FOR WELDING IN BUILDING CONSTRUCTION", AMERICAN WELDING SOCIETY (AWS), D1.1 AND THE AISC "SPECIFICATIONS FOR THE DESIGN, FABRICATION AND ERECTION OF STRUCTURAL STEEL FOR BUILDINGS".
2. ALL WELDERS SHALL HAVE EVIDENCE OF PASSING THE AWS STANDARD QUALIFICATION TESTS, AND SHALL BE CERTIFIED FOR THE WORK THEY ARE PERFORMING.
3. PROJECT WELDING SHALL BE PERFORMED ONLY IN ACCORDANCE WITH WELDING PROCEDURE SPECIFICATIONS (WPS) SUBMITTED BY THE CONTRACTOR AND REVIEWED BY THE EOR AND PROJECT WELDING INSPECTOR. THE WPS SHALL BE IN ACCORDANCE WITH AWS D1.1-D1.4 CURRENT EDITION.
4. WELDING OF STRUCTURAL STEEL SHALL BE PERFORMED PER AWS D1.1 USING E70XX ELECTRODES UNLESS OTHERWISE NOTED.
5. WELDING OF REINFORCING BARS SHALL BE PERFORMED PER AWS D1.4 USING E90XX ELECTRODES.
6. ALL FULL PENETRATION WELDS SHALL BE ULTRA-SONIC TESTED PER AWS D1.1. SEE AISC 341 SECTION W4.1.
7. ALL GROOVE OR BUTT WELDS SHALL BE COMPLETE PENETRATION WELDS, UNO. ALL EXPOSED BUTT WELDS SHALL BE GROUND SMOOTH.
8. ALL EXPOSED WELDS ON ARCHITECTURALLY EXPOSED STRUCTURAL STEEL (AESS) SHALL COMPLY WITH AISC CODE OF STANDARD PRACTICE, SECTION 10.
9. FIELD WELDS HAVE BEEN INDICATED WHERE THEY ARE EXPECTED TO OCCUR. THE CONTRACTOR SHALL DETERMINE THE ACTUAL FIELD WELDING NECESSARY TO COMPLETE THE PROJECT AND INCLUDE ALL ASSOCIATED COSTS WITHIN THE BASE BID.
10. EDGE OF PANEL RAILS SHALL BE A MINIMUM OF 33 KSI STEEL MATERIAL OF MINIMUM 20 GAUGE THICKNESS. PANEL REINFORCING SHALL BE WELDED TO EDGE RAILS WITH MINIMUM 1/4" FILLET WELDS ALL AROUND THE REINFORCING CROSS PERIMITER.
11. JOINTS BETWEEN PANEL TO PANEL, AND JOINTS BETWEEN PANEL TO STRUCTURAL STEEL, SHALL BE A MINIMUM 3/16" X 2" LONG STITCH WELD AT 12" MAXIMUM SPACING ON BOTH SIDES OF THE PANEL. WELD ELECTRODES SHALL BE AWS E7018

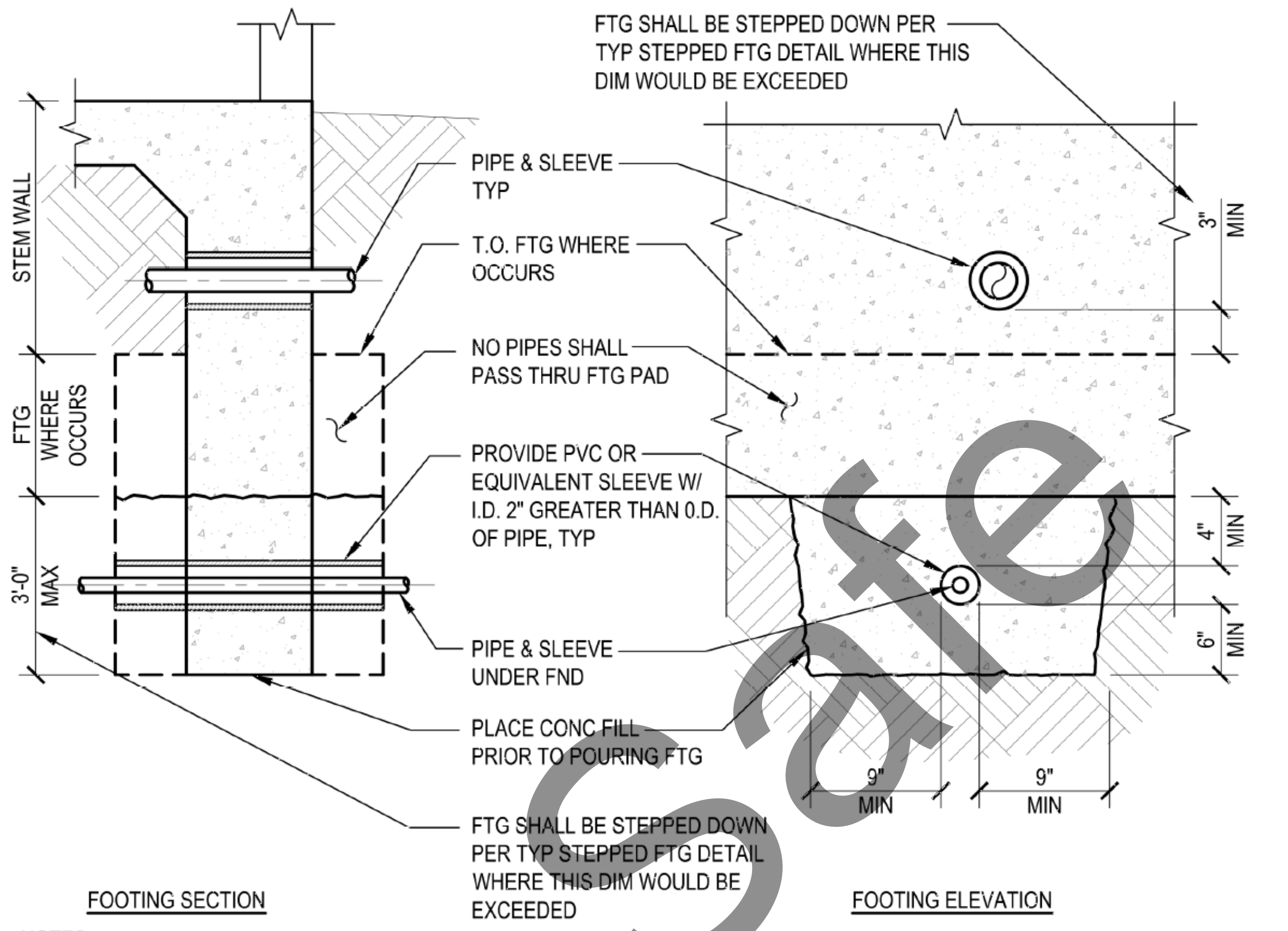

NOTES:

1. PIPES GREATER THAN 8" IN SIZE, BUNDLES OR BANKS NOT SPECIFICALLY SHOWN ON THE STRUCTURAL PLANS ARE NOT ALLOWED TO BE PLACED WITHOUT OBTAINING EOR APPROVAL.
2. CONTRACTOR SHALL COORDINATE ALL PIPE LOCATION WITH BUILDING FOUNDATION REQUIREMENTS.
3. IF REQUIREMENTS AS SHOWN CANNOT BE MET, STEP FOOTING PER TYPICAL "STEPPED FOOTING' DETAIL.

PIPE THROUGH/BELOW FOOTING

NTS

STRUCTURAL STEEL NOTES

1. DESIGN, FABRICATION AND ERECTION OF STRUCTURAL STEEL SHALL CONFORM TO THE SPECIFICATIONS AND STANDARD OF THE AMERICAN INSTITUTE OF STEEL CONSTRUCTION (AISC), AS CONTAINED IN THE LATEST EDITION OF "AISC MANUAL OF STEEL CONSTRUCTION".
2. ALL STRUCTURAL STEEL SHALL BE ERECTED PLUMB AND TRUE TO LINE. TEMPORARY BRACING SHALL BE INSTALLED AND SHALL BE LEFT IN PLACE UNTIL OTHER MEANS IS PROVIDED TO ADEQUATELY BRACE THE STRUCTURE.
3. PROVIDE THE FOLLOWING MATERIALS FOR STRUCTURAL STEEL UNO:

SHAPE	MATERIAL/GRADE
WIDE FLANGE SECTIONS	ASTM A992
PLATES, ANGLES, CHANNELS & TEES	ASTM A36
SQUARE OR RECTANGULAR HOLLOW STRUCTURAL SECTIONS (HSS)	ASTM A500, GRADE B (F_y=46 KSI)
ROUND HOLLOW STRUCTURAL SECTIONS (HSS)	ASTM A500, GRADE B (F_y=42 KSI)
PIPES	ASTM A53 TYPE E OR S, GRADE B, (F_y=35 KSI)
MACHINE BOLTS (MB)	ASTM A307
HIGH STRENGTH BOLTS (HSB)	ASTM A325 TYPE N
WELDED HEADED STUDS	ASTM A108
THREADED RODS FOR ANCHOR BOLTS	ASTM F1554, GRADE 36

a. EXCEPT AS OTHERWISE NOTED, ALL BOLTS SHALL BE HIGH STRENGTH BOLTS.

4. ALL CONNECTIONS NOT SHOWN SHALL CONFORM TO THE "AISC MANUAL OF STEEL CONSTRUCTION" AND SHALL BE SUBMITTED ON SHOP DRAWINGS FOR REVIEW BY EOR PRIOR TO FABRICATION.
5. ALL WELDED HEADED STUDS, THREADED STUDS, AND DEFORMED BARS SHALL BE NELSON, OR EQUIVALENT, AND WELDED (IN ACCORDANCE WITH MANUFACTURER'S RECOMMENDATIONS BY CERTIFIED WELDERS) SO AS TO FULLY DEVELOP THE TENSILE CAPACITY OF THE CONNECTOR.
6. BOLTS WITH UPSET THREADS ARE NOT ALLOWED. USE THE APPROPRIATE NUT AND WASHER TYPE FOR THE SPECIFIED BOLT.
7. ALL STEEL FABRICATION SHALL BE PERFORMED BY A LICENSED FABRICATOR.
8. ALL STRUCTURAL STEEL AND MISCELLANEOUS STEEL PERMANENTLY EXPOSED TO THE ELEMENTS SHALL BE HOT DIP GALVANIZED AFTER FABRICATION UNLESS A WEATHER PROOF COATING IS SPECIFIED BY THE ARCHITECT, UNO. STAINLESS AND WEATHERING STEELS, WHERE SPECIFIED, ARE EXEMPT FROM THIS REQUIREMENT. GALVANIZED SURFACES SHALL BE PROTECTED DURING CONSTRUCTION AND SHALL BE REPAIRED AS NECESSARY. ALL ARCHITECTURALLY EXPOSED STRUCTURAL STEEL (AESS) SHALL COMPLY WITH AISC CODE OF STANDARD PRACTICE, SECTION 10.
9. SEE ARCHITECTURAL DRAWINGS FOR NAILER HOLES, WELDED STUDS OR OTHER ITEMS NOT SHOWN IN THESE DRAWINGS. WHERE STEEL IS EMBEDDED IN CONCRETE OR MASONRY, PROVIDE HOLES AS REQUIRED FOR PASSAGE OF CONTINUOUS REINFORCING BARS WHERE INDICATED ON DRAWINGS. DO NOT CUT HOLES IN STRUCTURAL STEEL WITHOUT PRIOR APPROVAL OF EOR.
10. PLACE NON-SHRINK OR DRYPACK GROUT UNDER ALL BASE PLATES AND ALLOW TO CURE BEFORE APPLYING LOADS.
11. ALL WORK SHALL BE IN CONFORMANCE WITH ANY AND ALL TESTING, INSPECTION, QUALIFICATION, AND QUALITY ASSURANCE PROVISIONS AS REQUIRED BY THE BUILDING CODE AND ANY APPLICABLE STANDARDS. THESE STANDARDS INCLUDE, BUT ARE NOT LIMITED TO THE LATEST VERSION OF THE FOLLOWING: AISC 360 "SPECIFICATION FOR STRUCTURAL STEEL BUILDINGS"; AISC 341 "SEISMIC PROVISIONS FOR STRUCTURAL STEEL BUILDINGS", AWS D1.1 "STRUCTURAL WELDING CODE - STEEL"; AWS D1.8 "STRUCTURAL WELDING CODE - SEISMIC SUPPLEMENT"; AND RCSC "SPECIFICATION FOR STRUCTURAL JOINTS USING HIGH-STRENGTH BOLTS". CONFORMANCE TO SUPPLEMENTS TO THESE STANDARDS, IF PUBLISHED ON OR BEFORE THE DATE OF PERMIT ISSUANCE, IS ALSO REQUIRED. ALTHOUGH THESE CONTRACT DOCUMENTS INCLUDE GENERAL REFERENCES TO CODES AND STANDARDS, AND REFERENCES TO OR INCLUSIONS OF SPECIFIED PROVISIONS, OMISSIONS OF ANY APPLICABLE CODE, STANDARD, OR PROVISION DOES NOT RELIEVE THE GENERAL CONTRACTOR FROM COMPLIANCE TO THE APPLICABLE REQUIREMENTS. COORDINATION OF QUALITY CONTROL AND QUALITY ASSURANCE IS THE RESPONSIBILITY OF THE GENERAL CONTRACTOR.

EXISTING CONDITIONS NOTES

1. SEE "AS BUILT" DRAWINGS FOR EXISTING BUILDING ITEMS NOT SHOWN OR NOTED.
2. FIELD VERIFY ALL CONDITIONS & DIMENSIONS PRIOR TO SHOP DRAWING PRODUCTION AND FABRICATION OF STRUCTURAL ELEMENTS.
3. WHERE ALL OTHER EXISTING CONDITIONS VARY SIGNIFICANTLY FROM THOSE SHOWN ON THESE DRAWINGS, THE STRUCTURAL ENGINEER SHALL BE NOTIFIED PRIOR TO CONTINUED CONSTRUCTION RELATED TO SUBJECT CONDITIONS.
4. SHORE ALL EXISTING CONSTRUCTION AS REQUIRED, INCLUDING WHERE WELDING TO EXISTING STEEL FRAMING. SHORING DESIGN BY OTHERS.
5. ALL EXISTING CONCRETE SURFACES TO BE IN CONTACT WITH NEW CONCRETE SHALL BE ROUGHENED TO 1/4" MINIMUM AMPLITUDE. USE ICC APPROVED BONDING AGENT ON EXISTING CONCRETE PRIOR TO PLACING NEW CONCRETE.
6. VERIFY LOCATION OF EXISTING REBAR BEFORE FABRICATION USING NON-DESTRUCTIVE TESTING. EXISTING REINFORCING SHALL BE AVOIDED WHERE DRILLING FOR POST-INSTALLED ANCHORS OR CONCRETE DOWELS.
7. THE GENERAL CONTRACTOR SHALL COORDINATE THE WEIGHT AND SPECIFIC LOCATION OF ALL MECHANICAL EQUIPMENT WITH THE STRUCTURAL FRAMING. IF THE EQUIPMENT DEVIATES IN WEIGHT OR LOCATION FROM THOSE INDICATED IN THE DRAWINGS, THE STRUCTURAL ENGINEER'S APPROVAL MUST BE OBTAINED PRIOR TO INSTALLATION OF THE UNITS.
8. ALL EXISTING WOOD FRAMING MEMBERS SUPPORTING NEW MECHANICAL UNITS SHALL BE INSPECTED FOR DAMAGE AND DETERIORATION PRIOR TO INSTALLATION OF THE UNITS. NOTIFY THE STRUCTURAL ENGINEER IF DAMAGE OR DETERIORATION IS DISCOVERED.
9. ALL EXISTING (E) WOOD ELEMENTS TO REMAIN SHALL BE FIELD INSPECTED DURING CONSTRUCTION AND TREATED FOR DRYROT REMOVAL / CONTROL. WHERE EXISTING GLB'S TO REMAIN ARE FOUND TO HAVE EXTENSIVE DRYROT DEEPER THAN THE TOP TWO LAMINATIONS (3"), THE STRUCTURAL ENGINEER SHALL BE NOTIFIED PRIOR TO CONTINUED CONSTRUCTION RELATED TO SUBJECT GLB'S.
10. ALL EXISTING CONNECTIONS AT ELEMENTS TO BE REPLACED SHALL BE REPLACED OR RE-ATTACHED TO MATCH EXISTING CONDITIONS.

FOUNDATION AND SLAB ON GRADE NOTES

1. SEE SOIL REPORT BY .... BUENA ENGINEERS,INC.
   REPORT WAS PREPARED FOR THE SURROUNDING SUPER STRUCTURE
   DATED .... FEBRUAR 7 , 1989
2. MINIMUM WIDTH OF CONTINUOUS FOOTINGS .... 24" INCHES
   MINIMUM EMBEDMENT OF CONTINUOUS FOOTINGS .... 24" INCHES
3. ALLOWABLE SOIL PRESSURES FOR FOOTINGS:
   DEAD LOAD + LIVE LOAD .... 1500 PSF
   DEAD LOAD + LIVE LOAD + LATERAL LOAD .... 1500 PSF
4. THE CONTRACTOR SHALL CONFORM TO ALL RECOMMENDATIONS AND CONDITIONS INDICATED IN THE SOIL REPORT.
5. SPREAD FOOTINGS ARE CENTERED UNDER WALLS AND COLUMNS, UNO.
6. ALL TRENCHES SHALL COMPLY WITH APPLICABLE OSHA REQUIREMENTS. FOOTING BACKFILL AND UTILITY TRENCH BACKFILL WITHIN BUILDING AREA SHALL BE MECHANICALLY COMPACTED IN LAYERS WITH THE APPROVAL OF THE GEOTECHNICAL ENGINEER. FLOODING IS NOT PERMITTED.
7. CONSTRUCTION JOINTS (CJ) AND SAWCUT (SC) JOINTS IN SLABS SHALL OCCUR WHERE LOCATED ON PLANS AND DETAILS. CJ'S SHALL HAVE FORMED POUR STOPS. CONSTRUCTION JOINTS IN WALLS AND FOOTINGS NEED NOT OCCUR AT THE SAME LOCATION, UNO.
8. SEE ARCHITECT'S PLANS FOR LOCATIONS OF SLAB SLOPES, DEPRESSIONS, CURBS, DRAINS, NON-STRUCTURAL PARTITIONS AND OTHER EMBEDDED ITEMS NOT SHOWN ON THE STRUCTURAL PLANS.
9. CONTRACTOR SHALL PROTECT ALL UTILITY LINES, ETC. ENCOUNTERED DURING EXCAVATION AND BACKFILLING. THE ARCHITECT AND ENGINEERS ARE NOT RESPONSIBLE FOR THE LOCATIONS OF EXISTING UNDERGROUND UTILITIES WHETHER OR NOT SHOWN ON THE DRAWINGS. THE LOCATION OF ANY EXISTING UNDERGROUND UTILITIES SHOWN ON THE DRAWINGS ARE APPROXIMATE. THE CONTRACTOR SHALL IMMEDIATELY NOTIFY THE OWNER SHOULD ANY SUCH UNIDENTIFIED CONDITIONS BE DISCOVERED. THE CONTRACTOR SHALL BE RESPONSIBLE FOR ANY DAMAGES WHICH MAY RESULT FROM FAILURE TO EXACTLY LOCATE AND PRESERVE ALL EXISTING UNDERGROUND UTILITIES.

VAULT NOTES:
1) VAULT IS U.L. LISTED CLASS M CONCRETE.
2) NO LIVE LOAD IS TO BE PLACED ON THE ROOF. VAULT IS RATED ONLY TO SUPPORT ITSELF.
3) VAULT MEETS DEA SPECIFICATIONS FOR STORAGE OF SCHEDULE II PHARMACEUTICALS AS LISTED IN CONTROLLED SUBSTANCES HANDBOOK PART 1301 & IN CONJUNCTION WITH U/L STANDARDS.

JEFFREY ALAN CROSIER
S 3525
Exp. 03/31/21
8/13/2019

SCRIPPS® safe
TOTAL ℞ PROTECTION®

NOTES-1
SCRIPP SAFES
Job No.
Revised #2)07-25-19
Sheet No. 1 of 4
Date: 07-23-19
Scale: 1/2" = 1'-0"
Drawn By MAD
Approved By
Date App.

STATEMENT OF SPECIAL INSPECTIONS

010000-0003 (07/07/14)

1. THE OWNER SHALL EMPLOY ONE OR MORE SPECIAL INSPECTORS TO PROVIDE INSPECTIONS DURING CONSTRUCTION. THE SPECIAL INSPECTOR SHALL BE A QUALIFIED PERSON WHO SHALL DEMONSTRATE COMPETENCE, TO THE SATISFACTION OF THE BUILDING OFFICIAL, FOR INSPECTION OF THE PARTICULAR TYPE OF CONSTRUCTION OR OPERATION REQUIRING SPECIAL INSPECTION.

2. SPECIAL INSPECTIONS ARE NOT REQUIRED WHERE THE WORK IS DONE ON THE PREMISES OF A FABRICATOR REGISTERED AND APPROVED TO PERFORM SUCH WORK WITHOUT SPECIAL INSPECTION. APPROVED FABRICATORS MUST SUBMIT A CERTIFICATE OF COMPLIANCE FOR OFFSITE FABRICATIONS SUCH AS STRUCTURAL STEEL, PRECAST CONCRETE, GLUED LAMINATED TIMBER, ETC.

3. ALL INSPECTIONS SHALL BE PERFORMED BY INDEPENDENT SPECIAL INSPECTORS. JOB SITE VISITS BY THE STRUCTURAL ENGINEER OR BUILDING OFFICIAL DO NOT CONSTITUTE AND ARE NOT A SUBSTITUTE FOR INSPECTIONS BY A SPECIAL INSPECTOR.

4. ALL INSPECTION REPORTS SHALL BE SUBMITTED TO THE BUILDING OFFICIAL AND EOR. THE FINAL REPORTS BY THE SPECIAL INSPECTOR(S) MUST CERTIFY THAT THE ENTIRE STRUCTURAL SYSTEM COMPLIES WITH THE APPROVED PLANS AND SPECIFICATIONS.

5. IT IS SOLELY THE CONTRACTOR'S RESPONSIBILITY TO SEE THAT THESE INSPECTIONS ARE PERFORMED.

6. WORK REQUIRING SPECIAL INSPECTION SHALL BE INSPECTED BY THE SPECIAL INSPECTOR WHO IS PRESENT IN THE AREA WHERE THE WORK IS PERFORMED AND AT THE COMPLETION OF WORK. CONTINUOUS INSPECTION CONSISTS OF FULL-TIME INSPECTION; PERIODIC INSPECTION CONSISTS OF PART-TIME OR INTERMITTENT INSPECTION.

7. THE FOLLOWING SPECIAL INSPECTIONS ARE IN ADDITION TO INSPECTIONS BY THE BUILDING OFFICIAL. THIS LIST IS NOT INTENDED TO BE ALL INCLUSIVE.

SOILS SUPPORTING FOUNDATIONS

PERIODIC: VERIFY MATERIALS BELOW FOOTINGS ARE ADEQUATE TO ACHIEVE THE DESIGN BEARING CAPACITY

PERIODIC: VERIFY EXCAVATIONS ARE EXTENDED TO PROPER DEPTH AND HAVE REACHED PROPER MATERIAL

PERIODIC: PERFORM CLASSIFICATION AND TESTING OF CONTROLLED FILL MATERIALS

PERIODIC: VERIFY USE OF PROPER MATERIALS, DENSITIES AND LIFT THICKNESSES DURING PLACEMENT AND COMPACTION OF CONTROLLED FILLS

PERIODIC: PRIOR TO PLACEMENT OF CONTROLLED FILL, INSPECT SUBGRADE AND VERIFY THAT SITE HAS BEEN PREPARED PROPERLY

STRUCTURAL CONCRETE FOUNDATIONS

PERIODIC: INSPECTION OF REINFORCING STEEL AND PLACEMENT

PERIODIC: INSPECT BOLTS TO BE INSTALLED IN CONCRETE PRIOR TO AND DURING PLACEMENT OF CONCRETE

PERIODIC: VERIFY USE OF REQUIRED DESIGN MIX

CONT: SAMPLING FRESH CONCRETE & PERFORMING SLUMP AND AIR CONTENT TESTS & DETERMINING THE TEMPERATURE OF FRESH CONCRETE AT THE TIME OF MAKING SPECIMENS FOR STRENGTH TESTS

CONT: INSPECTION OF CONCRETE AND SHOTCRETE PLACEMENT FOR PROPER APPLICATION TECHNIQUES

PERIODIC: INSPECTION FOR MAINTENANCE OF SPECIFIED CURING TEMPERATURE AND TECHNIQUE

PERIODIC: VERIFICATION OF IN-SITU CONCRETE STRENGTH, PRIOR TO REMOVAL OF SHORES AND FORMS FROM BEAMS AND STRUCTURAL SLABS

PERIODIC: INSPECT FORMWORK FOR SHAPE, LOCATION AND DIMENSIONS OF THE CONCRETE MEMBER BEING FORMED

PERIODIC: POST-INSTALLED AND ADHESIVE ANCHORS

STRUCTURAL STEEL

PERIODIC: HIGH-STRENGTH BOLTS, NUTS, AND WASHERS IDENTIFICATION MARKINGS TO CONFORM TO ASTM STANDARDS SPECIFIED IN THE APPROVED CONSTRUCTION DOCUMENTS, MANUFACTURER'S CERTIFICATE OF COMPLIANCE REQUIRED

PERIODIC: INSPECTION OF HIGH-STRENGTH BOLTING BEARING-TYPE CONNECTIONS

PERIODIC: INSPECTION OF SLIP-CRITICAL CONNECTIONS USING TURN-OF-NUT METHOD WITH MATCHMARKING, DIRECT TENSION INDICATOR METHOD, OR TWIST OFF BOLTS

CONT: INSPECTION OF SLIP-CRITICAL CONNECTIONS USING CALIBRATED WRENCH METHOD OR TURN-OF-NUT WITHOUT MATCHMARKING

PERIODIC: STRUCTURAL STEEL IDENTIFICATION MARKINGS TO CONFORM TO ASTM STANDARDS SPECIFIED IN THE APPROVED CONSTRUCTION DOCUMENTS

PERIODIC: STRUCTURAL STEEL MANUFACTURER'S CERTIFIED MILL TEST REPORTS REQUIRED

PERIODIC: APPLICATIONS OF JOINT DETAILS AT EACH CONNECTION

WELDING

CONT: COMPLETE AND PARTIAL PENETRATION GROOVE WELDS

CONT: FILLET WELDS > 5/16" AND MULTIPASS FILLET WELDS

PERIODIC: FILLET WELDS ≤ 5/16"

PERIODIC: WELD FILLER MATERIAL IDENTIFICATION MARKINGS TO CONFORM TO AWS STANDARDS SPECIFIED IN THE APPROVED CONSTRUCTION DOCUMENTS, MANUFACTURER'S CERTIFICATION OF COMPLIANCE REQUIRED

CONT: WELDING OF REINFORCEMENT STEEL RESISTING SEISMIC FORCES, INDICATED ON PLANS AND DETAILS AS LFRS ELEMENTS OR CONNECTIONS

PERIODIC: VERIFICATION OF WELDABILITY OF REINFORCING STEEL OTHER THAN ASTM A706

CONT: WELDING OF STIRRUPS, HOOPS OR TIES

PERIODIC: ALL OTHER REINFORCEMENT WELDS, UNO

REGISTERED PROFESSIONAL ENGINEER JEFFREY ALAN GOSPER S 3525 Exp. 03/31/21 STRUCTURAL STATE OF CALIFORNIA

8/13/2019

SCRIPPS safe TOTAL R PROTECTION®	NOTES-2	SCRIPP SAFES	Job No.	Sheet No.	
			Revised #2)07-25-19	2 of 4	
	Date: 07-23-19	Scale: 1/2" = 1'-0"	Drawn By MAD	Approved By	Date App.

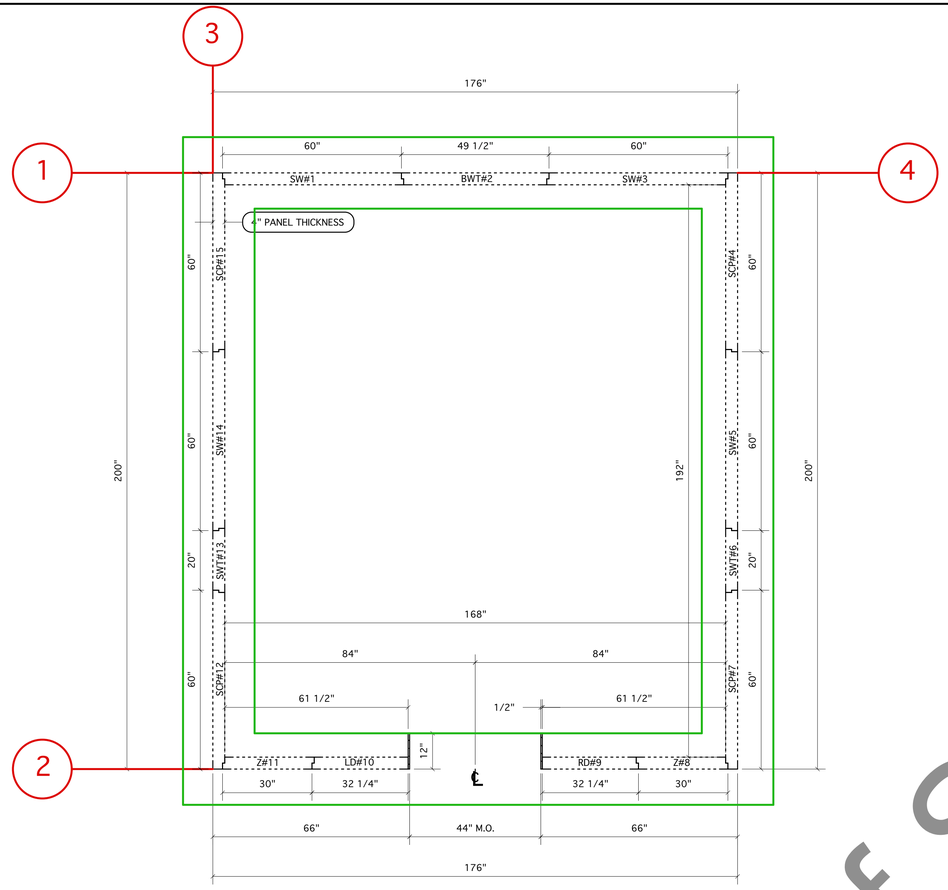

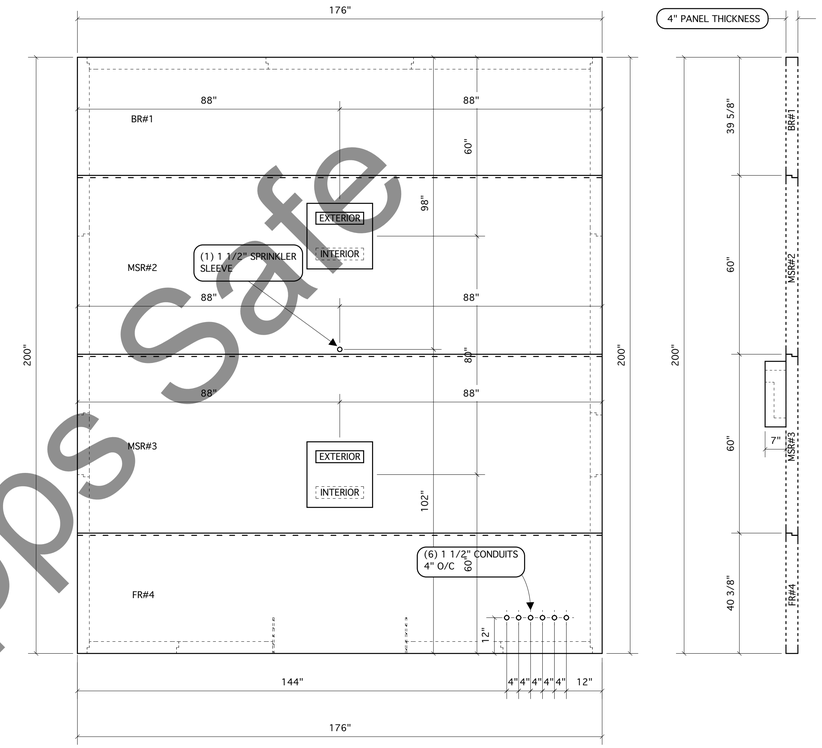

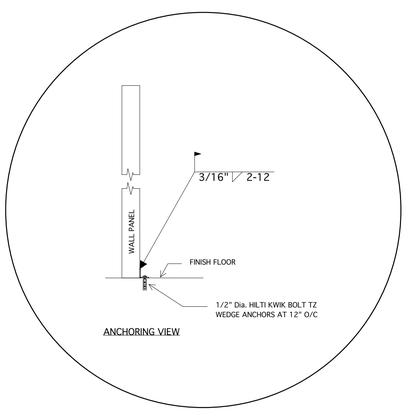

ANCHORING VIEW

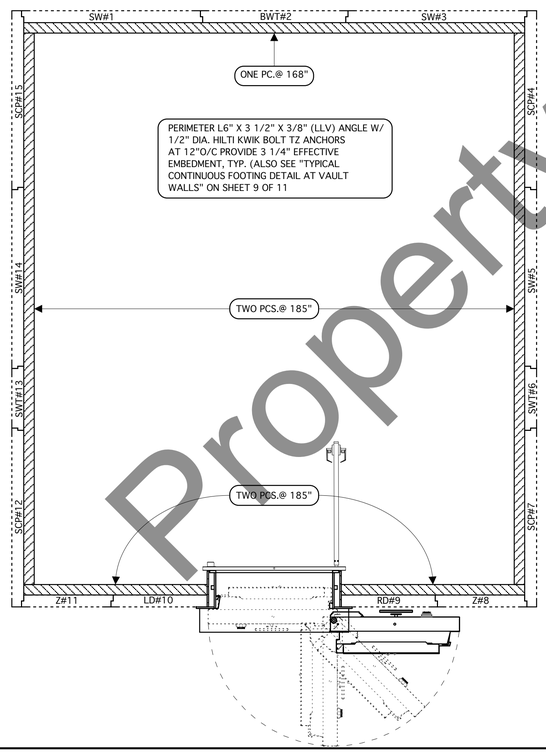

U.L. CLASS: M AEGVS (CONCRETE)

APPROX. WEIGHT: 42,663 LBS.
(WEIGHT INCLUDES VAULT DOOR & MISC. STEEL)

WELDS:
ONE (1) INCH 3/16" FILLET WELD
EVERY 12" O/C, INSIDE & INTERIOR
CEILING 2" WELD @ 12",
RECOMMENDED WELDING APPLICATION,
E7018 3/16" ROD OR .030 - .035
WIRE FEEDER

ABBREVIATIONS FOR CONCRETE

SW - STANDARD WALL
SCP - STANDARD CORNER PANEL
SWT - SIDE WALL "TEE"
BWT - BACK WALL "TEE"
LD - LEFT DOOR
RD - RIGHT DOOR
FR - FRONT ROOF
BR - BACK ROOF

NOTES:
1) ALLOWANCE FOR GROWTH OF APPROXIMATELY 1" PER 15'-0" OF VAULT SHOULD BE CONSIDERED

2) ALL PANEL HAVE TO BE INSTALLED IN NUMERIC ORDER

- - - - - - - - - - - - INDICATES CONCRETE SURFACE

———————— INDICATES GALVANIZED STEEL SURFACE

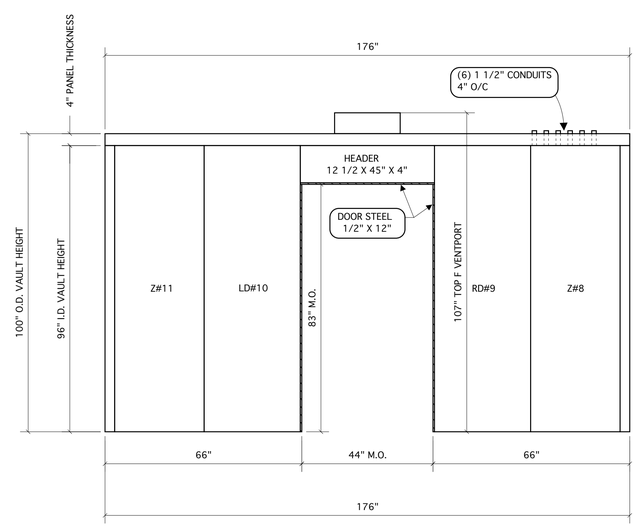

REGISTERED PROFESSIONAL ENGINEER
JEFFREY ALAN GROSS
S 3525
Exp. 03/31/21
STRUCTURAL
STATE OF CALIFORNIA
8/13/2019

SCRIPPS safe
TOTAL R PROTECTION®

VAULT DETAILS	SCRIPP SAFES	Job No.	Sheet No.
		Revised #2)07-25-19	3 of 4
Date: 07-23-19	Scale: 1/2" = 1'-0"	Drawn By MAD	Approved By	Date App.

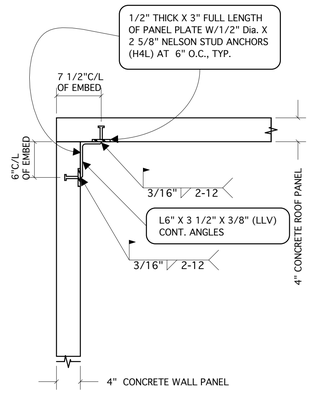

DETAIL (4) TYPICAL WALL PANEL TO ROOF PANEL CONNECTION

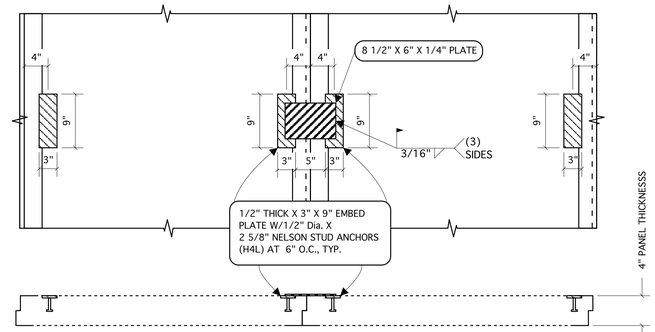

DETAIL (5) TYPICAL PANEL TO PANEL CONNECTION

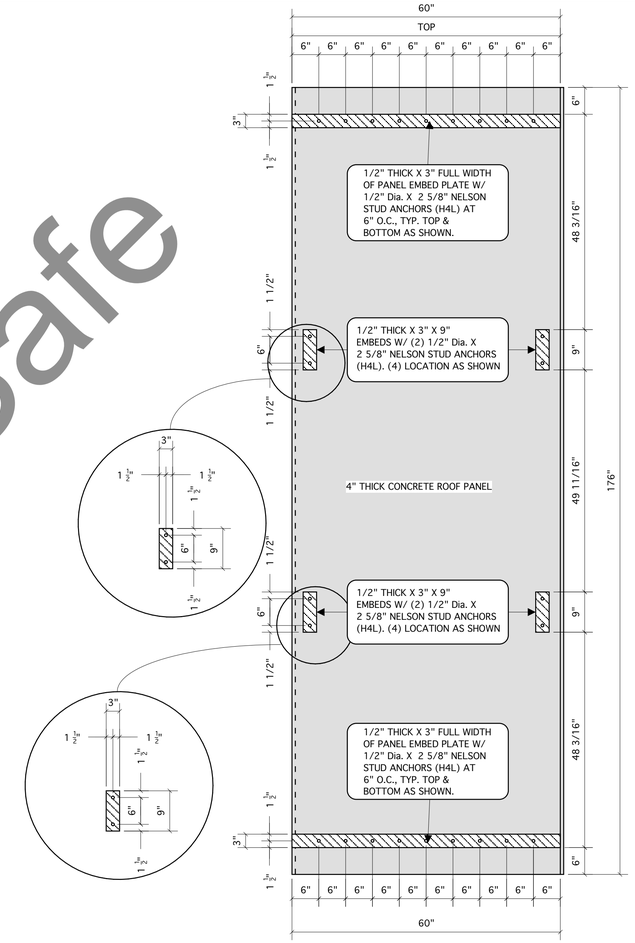

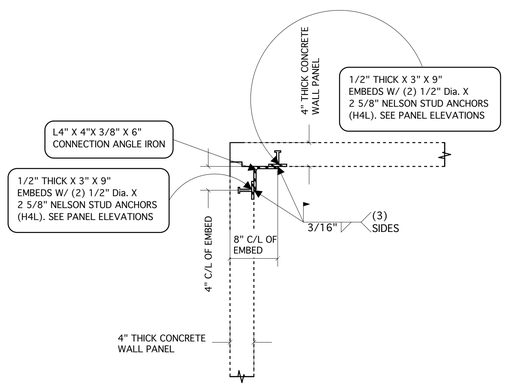

DETAIL (6) WALL TO WALL PANEL CONNECTION AT CORNER-PLAN VIEW

TYPICAL CONTINUOUS FOOTING DETAIL AT VAULT WALLS

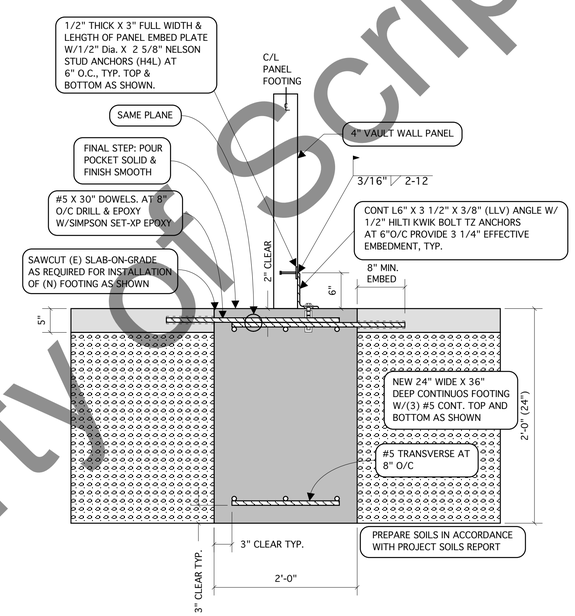

DETAIL 7 CONTINOUSFOOTING DETAIL AT VAULT WALLS

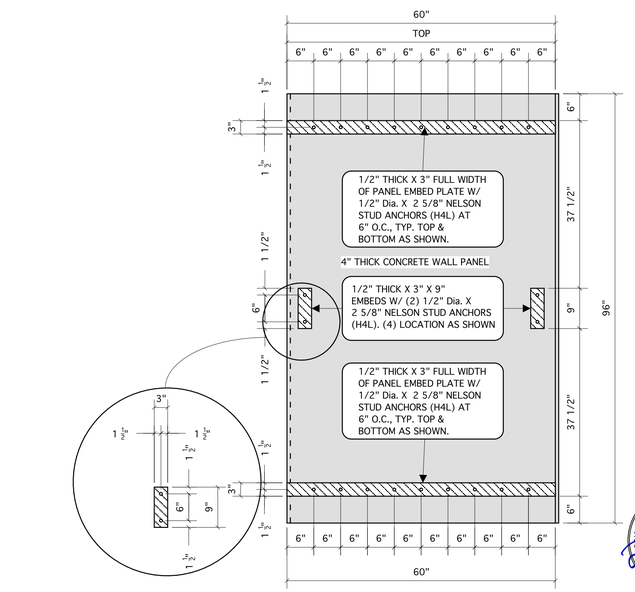

REGISTERED PROFESSIONAL ENGINEER JEFFREY ALAN CLOSIER S 3525 STRUCTURAL STATE OF CALIFORNIA Exp. 09/01/21

8/13/2019

SCRIPPS safe TOTAL R PROTECTION®

PANEL DETAILS	SCRIPP SAFES	Job No.	Sheet No.
		Revised #2)07-25-19	4 of 4
Date: 07-23-19	Scale: NOT TO SCALE	Drawn By MAD	Approved By	Date App.

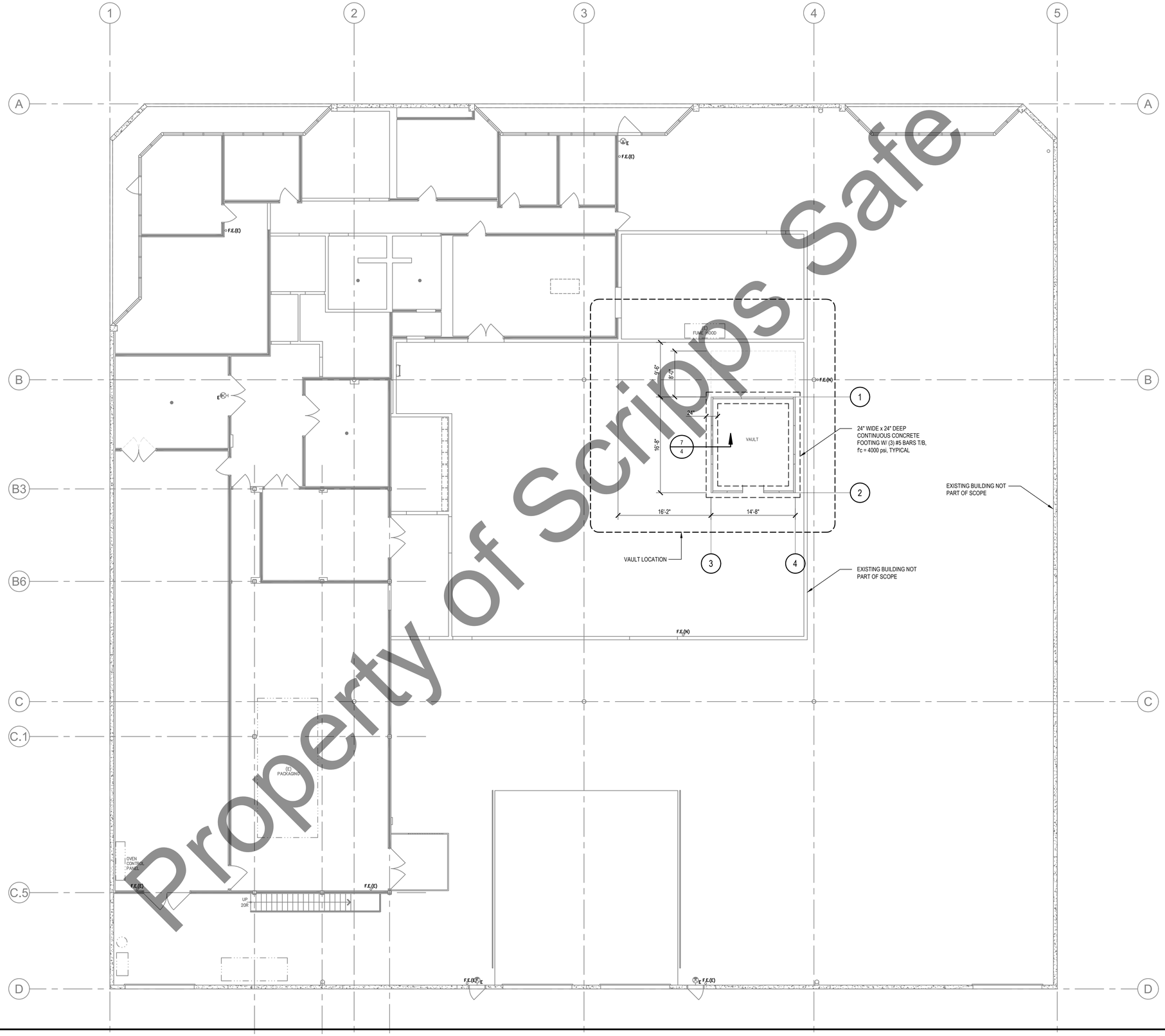

miyamoto.
1901 East Alton Avenue, Suite 160
Santa Ana, CA 92705
T: (949) 579-1170
miyamotointernational.com

REGISTERED PROFESSIONAL ENGINEER
JEFFREY ALAN CLOSIER
S 3525
Exp. 03/01/21
STRUCTURAL
STATE OF CALIFORNIA
8/13/2019

SCRIPP SAFES
OXNARD, CA 93033

REVISIONS

PROJECT #: MI1904090.00
DATE: 8-8-2019
DRAWN:
CHECKED:

S1.1

WALL PANEL
FOUNDATION
PLAN